HISTORY

Model Name : SDM-HS53
SERVICE MANUAL
Part No. : 9-978-782-03

When clicking an item, it's detail is displayed.

Date	SUPP./CORR.	Description of SUP/COR	Change of main text
2003.09		NEW	–
2003.09		Repair parts modification.	Yes
2004.03		TPV Productions Addition.	Yes

SDM-HS53

SERVICE MANUAL

US Model
Canadian Model
AEP Model
Chinese Model

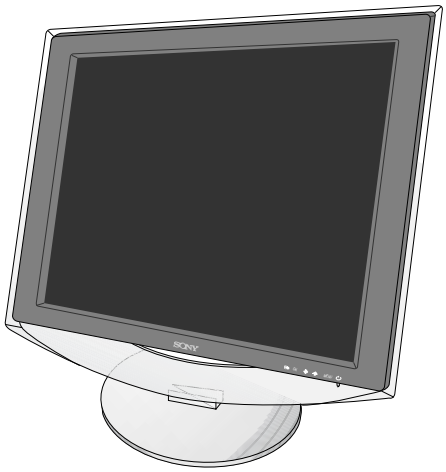

TFT LCD COLOR COMPUTER DISPLAY

SONY®

There are some different LCD panels are used in the model SDM-HS53.
Therefore the repair parts are also different.
Please confirm the serial number before repairing.

LGE Production

Color	Dest.	Description	Product code	Serial Number	LCD Panel
White	USA	SDM-HS53/WC UC7	17-4444-10	6,000,001-6,200,000	LPL Panel
Gray	USA	SDM-HS53/HC UC7	17-4460-10	3,200,001-3,350,000	
White	AEP	SDM-HS53/WC EKZ	17-4444-20	6,200,001-6,400,000	
Gray	AEP	SDM-HS53/HC EKZ	17-4460-20	3,350,001-3,500,000	
Blue	AEP	SDM-HS53/LC EKZ	17-4457-20	3,700,001-3,900,000	

TPV Production

Color	Destination	Serial Number	LCD Panel
White	U/C	1,000,001-1,050,000	CPT Panel
		1,050,001-1,100,000	Samsung Panel
	AEP	1,210,001-1,220,000	CPT Panel
		1,220,001-1,230,000	Samsung Panel
Grey	U/C	1,100,001-1,150,000	CPT Panel
		1,150,001-1,200,000	Samsung Panel
	AEP	1,230,001-1,240,000	CPT Panel
		1,240,001-1,250,000	Samsung Panel
Blue	U/C	1,200,001-1,205,000	CPT Panel
		1,205,001-1,210,000	Samsung Panel
	AEP	1,250,001-1,255,000	CPT Panel
		1,255,001-1,260,000	Samsung Panel
Black	U/C	1,400,001-1,450,000	CPT Panel
		1,450,001-1,500,000	Samsung Panel
	AEP	1,500,001-1,525,000	CPT Panel
		1,525,001-1,550,000	Samsung Panel

CONTENTS

SPECIFICATIONS 2
PRECAUTIONS 3
TIMING CHART 4
OPERATING INSTRUCTIONS 5
WIRING DIAGRAM 6
BLOCK DIAGRAM 7
ADJUSTMENT 8
EXPLODED VIEW.....9
REPLACEMENT PARTS LIST 10

SPECIFICATIONS

1. LCD CHARACTERISTICS

Type : TFT XGA LCD Module
Pixel Pitch : 0.297mm x 0.297mm
Color Depth : 6bits(with FRC)/ 16M colors
Active Video Area : 15.0inch (304.128 x 228.096)
Surface Treatment : Anti-Glare, Hard Coating (3H)
Backlight Unit : Top/Bottom edge side 2CCFL
Electrical Interface : LVDS interface

2. OPTICAL CHARACTERISTICS

2-1. Viewing Angle by Contrast Ratio ≥ 10
Left : 120°(typ)
Right : 120°(typ)
Top : 90°(typ)
Bottom : 90°(typ)

2-2. Luminance: 200(min.), 250(typ.)

2-3. Contrast Ratio : 250(min.), 350(typ.)

3. SIGNAL (Refer to the Timing Chart)

3-1. Sync Signal
1) Type : Separate Sync. (Horizontal & Vertical)
2) Input Voltage Level : Low=0~0.8V, High=2.1~5.5V
3) Sync Polarity : Positive or Negative

3-2. Video Input Signal
1) Type : R, G, B Analog
2) Voltage Level : 0.7 V
a) Color 0, 0 : 0 Vp-p
b) Color 7, 0 : 0.467 Vp-p
c) Color 15, 0 : 0.714 Vp-p
3) Input Impedance : 75 Ω

3-3. Operating Frequency
Horizontal : 28 ~ 61kHz
Vertical : 48 ~ 75Hz

4. POWER SUPPLY

4-1. Power
100~240V, 50/60Hz 0.6A

4-2. Power Consumption

MODE	H/V SYNC	VIDEO	POWER CONSUMPTION	LED COLOR
POWER ON (MAX)	ON/ON	ACTIVE	less than 25 W	GREEN
DPM MODE	ON/OFF	OFF	less than 1 W	AMBER
	OFF/ON	OFF	less than 1 W	AMBER
DPMS OFF	OFF/OFF	OFF	less than 1 W	AMBER
POWER S/W OFF	-	-	less than 1 W	-

5. ENVIRONMENT

5-1. Operating Temperature: 10°C~35°C (50°F~95°F) (Ambient)
5-2. Relative Humidity : 10%~80% (Non-condensing)
5-3. MTBF : 50,000 Hours (Min.)
Lamp Life : 40,000 Hours (Min.)

6. DIMENSIONS (with TILT/SWIVEL)

Width : 390mm (15.35")
Depth : 185mm (7.28")
Height : 342mm (13.46")

7. WEIGHT (with TILT/SWIVEL)

Net. Weight : 3.8kg (8.38lbs)
Gross Weight : 5.6kg (12.35 lbs)

PRECAUTION

WARNING FOR THE SAFETY-RELATED COMPONENT.

- There are some special components used in LCD monitor that are important for safety. ***These parts are marked ⚠on the schematic diagram and the replacement parts list.*** It is essential that these critical parts should be replaced with the manufacturer's specified parts to prevent electric shock, fire or other hazard.
- Do not modify original design without obtaining written permission from manufacturer or you will void the original parts and labor guarantee.

TAKE CARE DURING HANDLING THE LCD MODULE WITH BACKLIGHT UNIT.

- Must mount the module using mounting holes arranged in four corners.
- Do not press on the panel, edge of the frame strongly or electric shock as this will result in damage to the screen.
- Do not scratch or press on the panel with any sharp objects, such as pencil or pen as this may result in damage to the panel.
- Protect the module from the ESD as it may damage the electronic circuit (C-MOS).
- Make certain that treatment person's body are grounded through wrist band.
- Do not leave the module in high temperature and in areas of high humidity for a long time.
- The module not be exposed to the direct sunlight.
- Avoid contact with water as it may a short circuit within the module.
- If the surface of panel become dirty, please wipe it off with a softmaterial. (Cleaning with a dirty or rough cloth may damage the panel.)

⚠ CAUTION

Please use only a plastic screwdriver to protect yourself from shock hazard during service operation.

⚠ WARNING

BE CAREFUL ELECTRIC SHOCK !

- If you want to replace with the new backlight (CCFL) or inverter circuit, must disconnect the AC adapter because high voltage appears at inverter circuit about 650Vrms.
- Handle with care wires or connectors of the inverter circuit. If the wires are pressed cause short and may burn or take fire.

TIMING CHART

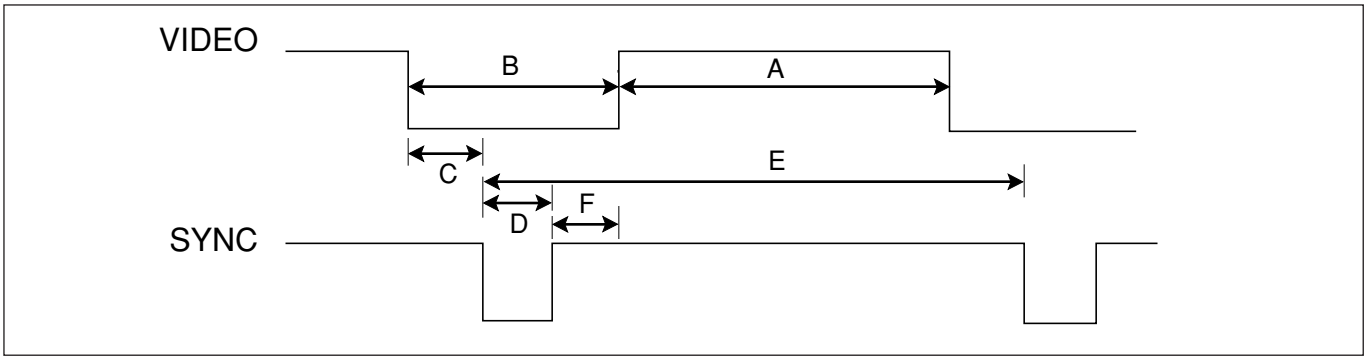

MODE	H / V	Sync Polarity	Dot Clock	Frequency	Total Period (E)	Video Active Time (A)	Blanking Time (B)	Sync Duration (D)	Back Porch (F)	Front Porch (C)	Resolution
1	H (Pixels)	–	28.350	31.50 KHz	900	720	180	108	54	18	720 x 400
	V (Lines)	+		70.156 Hz	449	400	49	3	34	12	
2	H (Pixels)	–	25.175	31.469 KHz	800	640	160	96	48	16	640 x 480
	V (Lines)	–		59.940 Hz	525	480	45	2	33	10	
3	H (Pixels)	–	30.240	35.00 KHz	864	640	224	64	96	64	640 x 480
	V (Lines)	–		66.667 Hz	525	480	45	3	39	3	
4	H (Pixels)	–	31.5	37.50 KHz	840	640	200	64	120	16	640 x 480
	V (Lines)	+		75.0 Hz	500	480	20	3	16	1	
5	H (Pixels)	–	31.505	35.162 KHz	896	720	176	40	102	34	720 x 480
	V (Lines)	–		59.901 Hz	587	480	107	2	93	12	
6	H (Pixels)	+	36.0	35.156 KHz	1024	800	224	72	128	24	800 x 600
	V (Lines)	+		56.25 Hz	625	600	25	2	22	1	
7	H (Pixels)	+	40.0	37.879 KHz	1056	800	256	128	88	40	800 x 600
	V (Lines)	+		60.317 Hz	628	600	28	4	23	1	
8	H (Pixels)	+	50.0	48.077 KHz	1040	800	240	120	64	56	800 x 600
	V (Lines)	+		72.188 Hz	666	600	66	6	23	37	
9	H (Pixels)	+	49.5	46.875 KHz	1056	800	256	80	160	16	800 x 600
	V (Lines)	+		75.0 Hz	625	600	25	3	21	1	
10	H (Pixels)	–	57.285	49.727 KHz	1152	832	320	64	224	32	832 x 624 (MAC 16”)
	V (Lines)	–		74.553 Hz	667	624	43	3	37	3	
11	H (Pixels)	–	65	48.363 KHz	1344	1024	320	136	160	24	1024 x 768
	V (Lines)	–		60.004 Hz	806	768	38	6	29	3	
12	H (Pixels)	–	71.640	53.946 KHz	1328	1024	304	176	112	16	1024 x 768
	V (Lines)	–		66.110Hz	816	768	48	4	36	8	
13	H (Pixels)	–	75	56.476 KHz	1328	1024	304	136	144	24	1024 x 768
	V (Lines)	–		70.069 Hz	806	768	38	6	29	3	
14	H (Pixels)	+	78.75	60.023 KHz	1312	1024	288	96	176	16	1024 x 768
	V (Lines)	+		75.029 Hz	800	768	32	3	28	1	
15	H (Pixels)	–	80.00	60.241KHz	1328	1024	304	96	176	32	1024 x 768 (MAC 19”)
	V (Lines)	–		74.928Hz	804	768	36	3	30	3	

OPERATING INSTRUCTIONS

FRONT VIEW

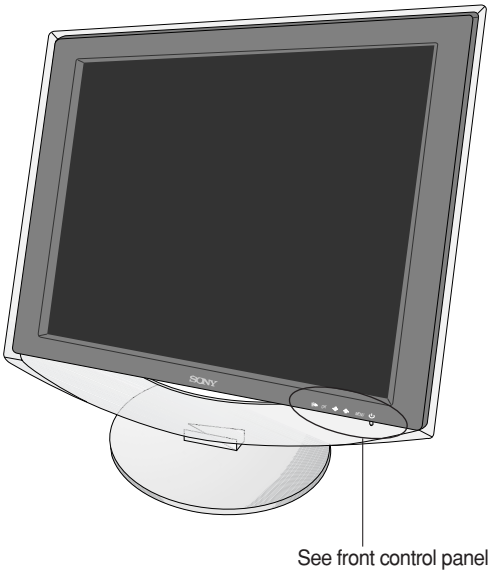

REAR VIEW

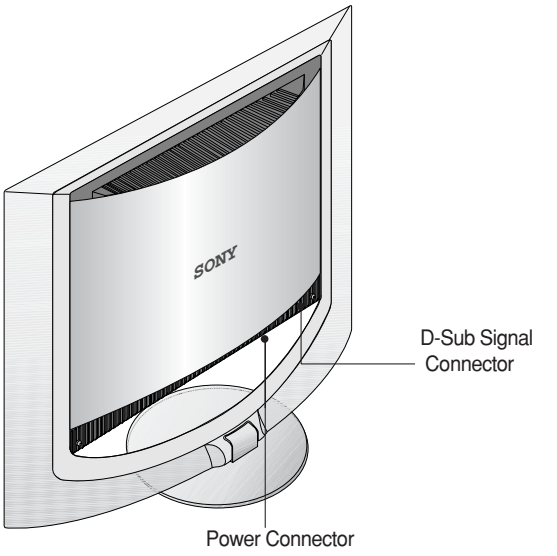

Front Control Panel

1. **Power switch and indicator**
   This switch turns the dislay on and off.
   This power indicator lights up in green when the display is turned on, and lights up in orange when the monitor is in power saving mode.

2. **MENU Button**
   This button display or close the main menu.

3. **⇧/⇩ Buttons**
   These buttons function as the ⇧/⇩ buttons when selecting the menu items and making adjustments.

4. **OK Button**
   This button select the item or executes the settings in the menu.

5. **☼ Button(Backlight Control)**

WIRING DIAGRAM

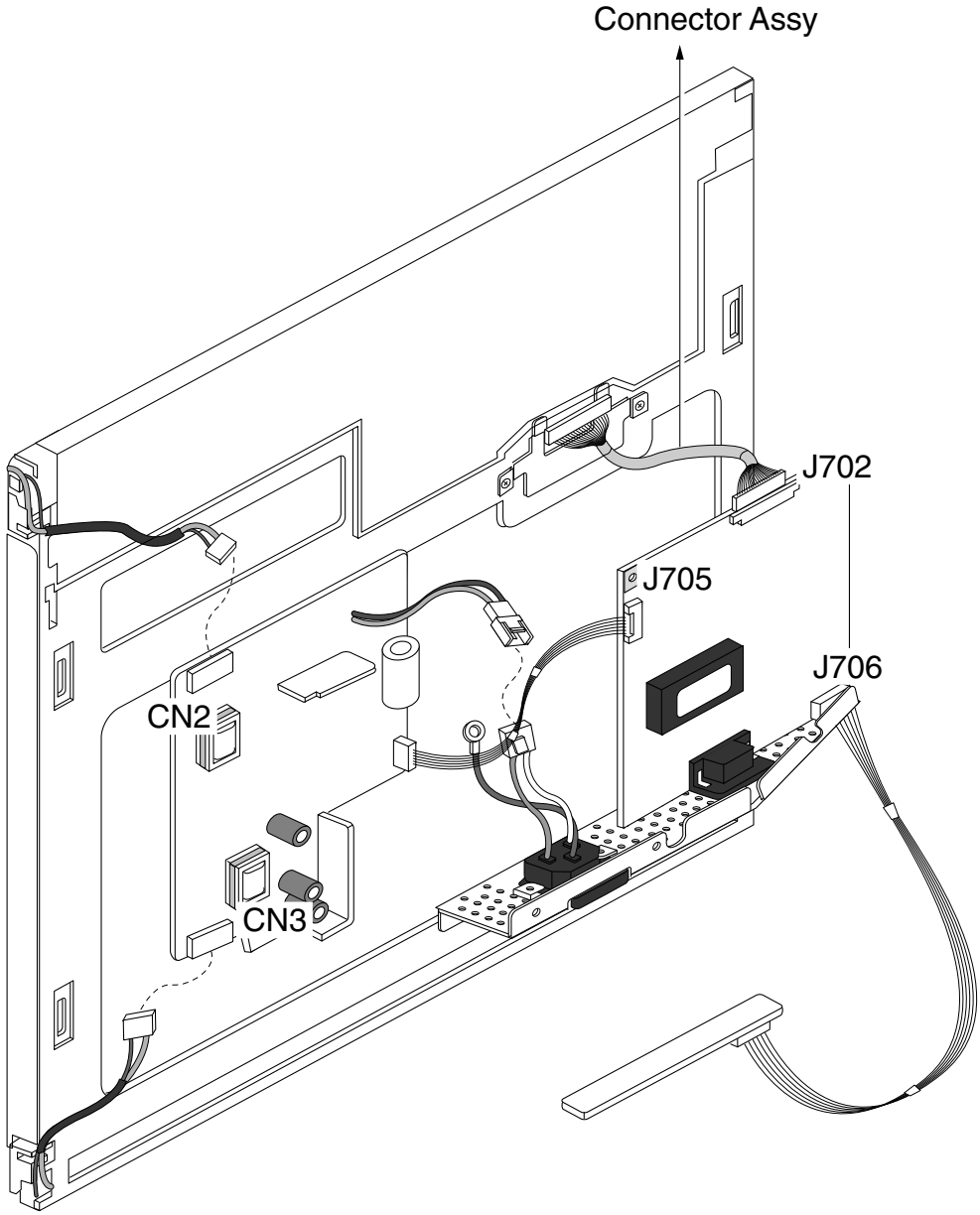

BLOCK DIAGRAM

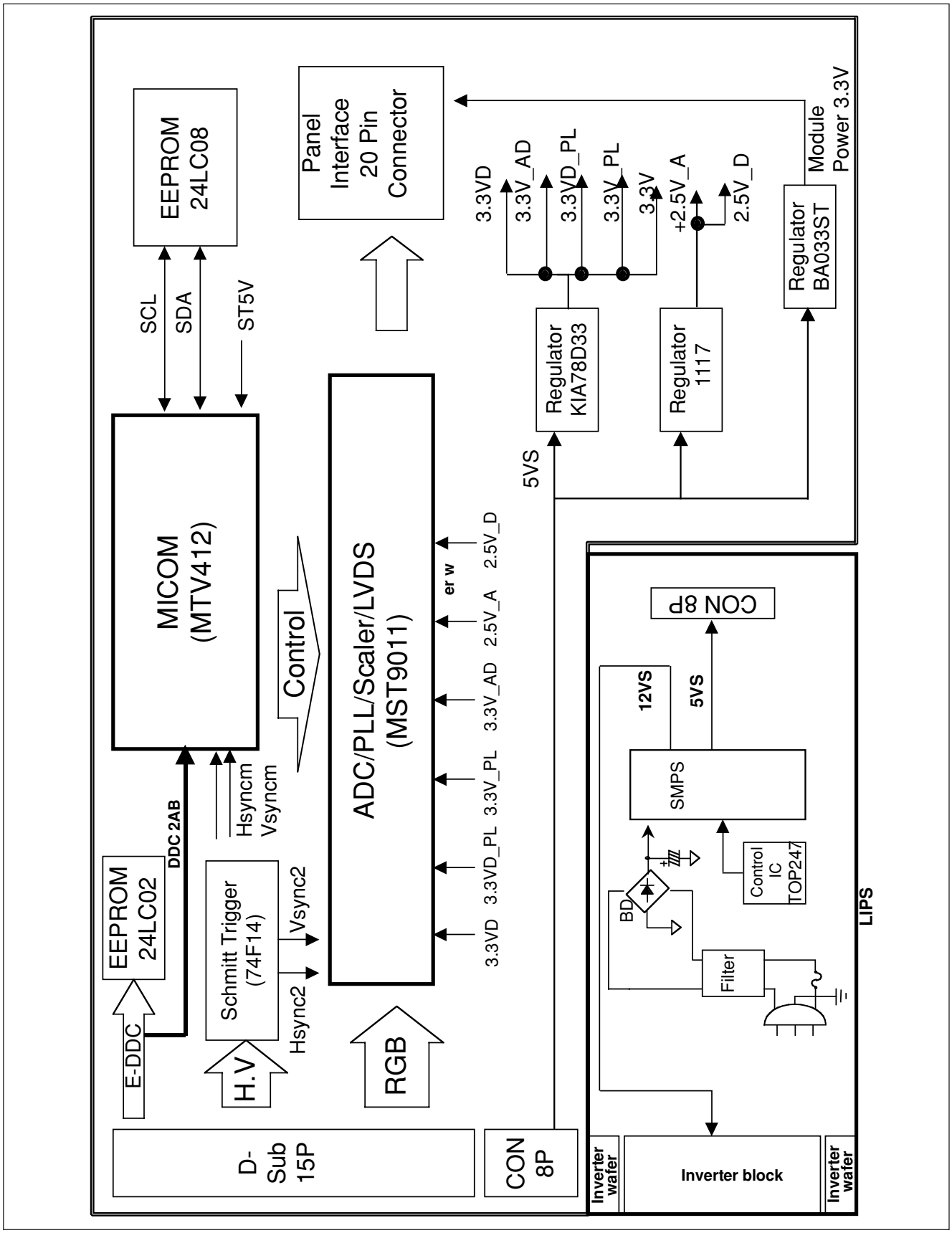

ADJUSTMENT

1. Procedures of how to go to service mode.

1) Enter the service mode of this unit by turning on the power while pressing and holding the " ↓ " key simultaneously.
2) Press "MENU" key----MAINTAIN.
3) Press "OK" key to enter the service menu.
4) Select the desired function.
5) Press the "MENU" key to exit OSD.
6) Turn off the power and then turn on it again. The monitor then enters the normal mode.
   To enter the service again, repeat the procedure described above.

Note

W/B readjustment is required after the panel, board and microcomputer are replaced. However, be sure to perform aging for more than 30 minutes for RGB reset before W/B adjustment.

2. Setup

1) Prepare timing and pattern data for a signal generator according to the Sony timing specifications.
2) Connect a monitor video cable to the signal generator.
3) Put Color Analyzer(ex. CA-110) 50cm away from the monitor, specify it vertically in the center of the display, and adjust the focus to the optimum level using an eyepiece.
4) Put the monitor and Color Analyzer(ex. CA-110) in a light-shielded room.
5) Set up [SERVICE MODE] of the monitor.

3. Operation

Data is manually set to improve the productivity. The brightness, contrast, and backlight are set to 50, 70 and 100 respectively. After that, the default data of the color temperature to be adjusted is set.

4. Warm up time

Warm up for 30 minutes before performing any adjustment.

5. Adjustment for White Balance

a. Display Integrated pattern(contains 0% black to 100% white) whitch has no SOG signal(Output voltage: 730mVp-p, XGA 60Hz).
b. Set up [SERVICE MODE].
c. Click "White balance".
c. Enter the service mode in case of show "color calibration complete" message.

6. 9300K color adjustment

a. Select "9300K" in "COLOR TEMP" and enter.
b. Use a 35% IRE white video field in the primary mode.
c. Adjust "R/G/B Drive " to secure the color temperature from 6500K R/G/B initial drive data.
c-1. Down “B-Drive” for color Y.
c-2. Down/Up “R-Drive” for color X.
d. Press "OK" key to exit adjust mode.

7. 6500K color adjustment

a. Select "6500K" in "COLOR TEMP" and enter.
b. Repeat the adjustment procedure as steps b to d at 9300K.

8. MENU → RESET → OK

EXPLODED VIEW

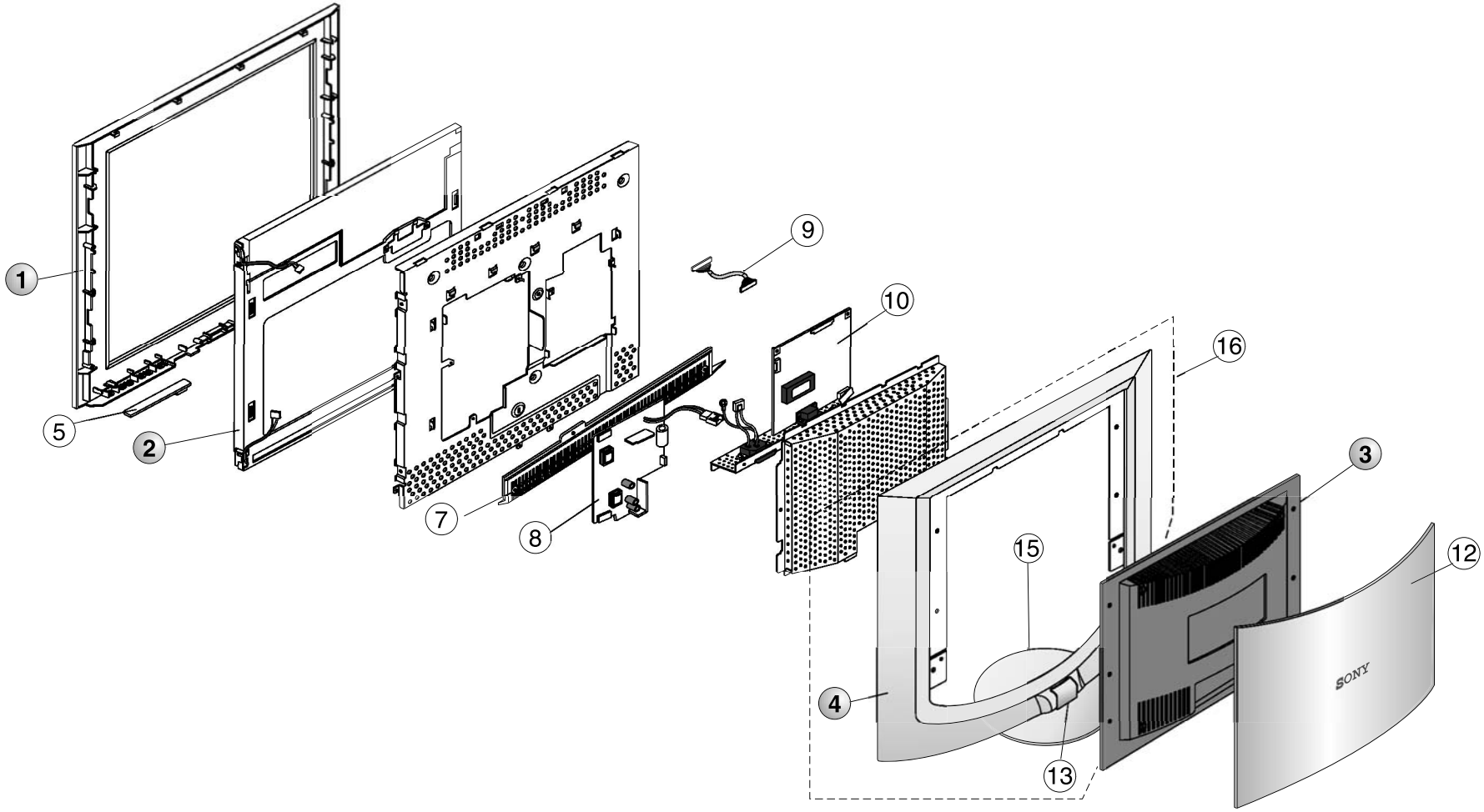

EXPLODED VIEW PARTS LIST

LGE Production

Ref. No.	Part No.	Description	Remark
1	X-4041-454-1	BEZEL ASSY(White)	3091TKL062D
	X-4041-458-1	BEZEL ASSY(Blue)	3091TKL062E
	X-4041-476-1	BEZEL ASSY(Gyay)	3091TKL062F
2	1-805-211-11	LCD PANEL (LM150X06)	6304FLP025A
3	X-4041-455-1	BACK CABINET ASSY(White)	3809TKL042D
	X-4041-459-1	BACK CABINET ASSY(Blue)	3809TKL042E
	X-4042-659-1	BACK CABINET ASSY(Gray)	3809TKL042F
4	X-4041-456-1	CENTER CABINET ASSY	3043TKK110A
5	A-1404-961-A	H MOUNT/CONTROL	6871TST366E
7	4-094-387-01	COVER, BOTTOM VENT(White)	3550TKK307A
	4-094-387-11	COVER, BOTTOM VENT(Blue)	3550TKK307B
	4-094-387-21	COVER, BOTTOM VENT(Gray)	3550TKK307C
8	A-1404-779-A	G MOUNT/POWER AC-DC	6871TPT234E
9	1-900-273-28	LVDS CONNECTOR ASSY	6631T11016G
10	A-1404-960-A	A MOUNT/SCALER	3313TL5060E
12	4-094-388-01	COVER, REAR(White)	3550TKK308A
	4-094-388-11	COVER, REAR(Blue)	3550TKK308B
	4-094-388-21	COVER, REAR(Gray)	3550TKK308C
13	4-094-391-01	HINGE COVER	3550TKK311A
15	X-4041-457-1	STAND ASSY	3043TKK114A
16	X-4042-660-1	CENTER CABINET ASSY WITH TILT SWIVEL ASSY	3043TKK110B
	* 4-094-454-01	PURSE LOCK	4930TKK026B
ACCESSORIES & PACKING MATERIALS			
	1-827-110-21	CABLE, D-SUB	6850TD9004C
	1-827-118-21	CORD SET, POWER SUPPLY (UC)	6410TUW002G
	1-827-120-21	CORD SET, POWER SUPPLY (AEP)	6410TEW005D
	1-827-781-21	CORD SET, POWER SUPPLY (CH)	6410TCW004B
	4-094-157-01	CD-ROM (MANUAL) (AEP, CH)	3170TZ1226B
	4-094-506-11	CD-ROM (MANUAL) (U/C)	3170TZ1226C
	4-094-158-01	QUICK SETUP GUIDE (U/C, CH)	3828TUO206B
	4-094-158-11	QUICK SETUP GUIDE (AEP)	3828TUO206D
	* 4-094-345-01	INDIVIDUAL CARTON	3890TSE411A
	* 4-094-400-01	CUSHION	3920TKE216A
	* 4-094-401-01	BAG, PROTECTION	3880TKZ009E

TPV Production

Ref. No.	Part No.	Description	Remarks
1	X-4042-959-1	BEZEL ASSY (Gray)	34L1257AHY L GP
	X-4043-118-1	BEZEL ASSY (Black)	34L1257AKA L GP
	X-4042-887-1	BEZEL ASSY (White)	34L1257AHV L GP
	X-4042-961-1	BEZEL ASSY (Blue)	34L1257AHX L GP
2	1-805-565-11	LCD PANEL (CPT)	15L5974-1 GP
3	X-4042-960-1	BACK CABINET ASSY (Gray)	34L1259AHY L GP
	X-4043-119-1	BACK CABINET ASSY(Black)	34L1259 AKA L GP
	X-4042-888-1	BACK CABINET ASSY(White)	34L1259AHV L GP
	X-4042-962-1	BACK CABINET ASSY(Blue)	34L1259AHX L GP
4	X-4042-889-1	CENTER CABINET ASSY	34L1260HW B GP
5	A-1410-860-A	H MOUNT	A1410860A
7	4-101-629-11	BOTTOM VENT COVER (Gray)	34L1262AHY L GP
	4-101-629-31	BOTTOM VENT COVER (Black)	34L1262 HW L GP
	4-101-629-01	BOTTOM VENT COVER (White)	34L1262AHV L GP
	4-101-629-21	BOTTOM VENT COVER (Blue)	34L1262AHX L GP
8	A-1410-858-A	G MOUNT (for CPT)	715L1207-F-GP
9	1-900-283-14	CONNECTOR ASSY	95L8014-12-6-GP
10	A-1410-859-A	A MOUNT (for CPT)	715L1218-1C GP
12	4-101-630-11	REAR COVER (Gray)	34L1261AHY B GP
	4-101-630-31	REAR COVER (Black)	34L1261AKA L GP
	4-101-630-01	REAR COVER (White)	34L1261AHV B GP
	4-101-630-21	REAR COVER (Blue)	34L1261AHX B GP
13	4-101-633-01	HINGE COVER	33L4689HW L GP
15	X-4042-890-1	STAND ASSY	705L560KB34071 GP
ACCESSORIES & PACKING MATERIALS			
	4-101-570-01	INDIVIDUAL CARTON	44LP501-834-1A GP
	4-101-642-01	CUSHION	44LP501-1/2 GP
	4-101-643-01	PROTECTION BAG	45L88607SN2 GP
	1-828-847-11	POWER-SUPPLY CORD SET (U/C)	89L40213-18N-IS GP
	1-827-120-21	POWER-SUPPLY CORD SET (AEP)	LG's AC Power Cord ⋘LG P/N: 6410TEW005D⋙
	1-827-110-21	D-SUB CABLE	89L1738-LAS-12 GP
	4-094-158-32	QUICK SETUP GUIDE (U/C, CH)	41L7800-834-5A GP
	4-094-158-41	QUICK SETUP GUIDE (AEP)	41L7800834 5B GP
	4-101-574-02	CD-ROM	70L1600-834-1A GP
	4-101-644-01	PURSE LOCK	LG's Purse Lock ⋘Sony P/N: 409445401⋙

© 2003. 9